PONTIAC STRATO SEDAN ”59” 1/5

3D
Quebra Cuca

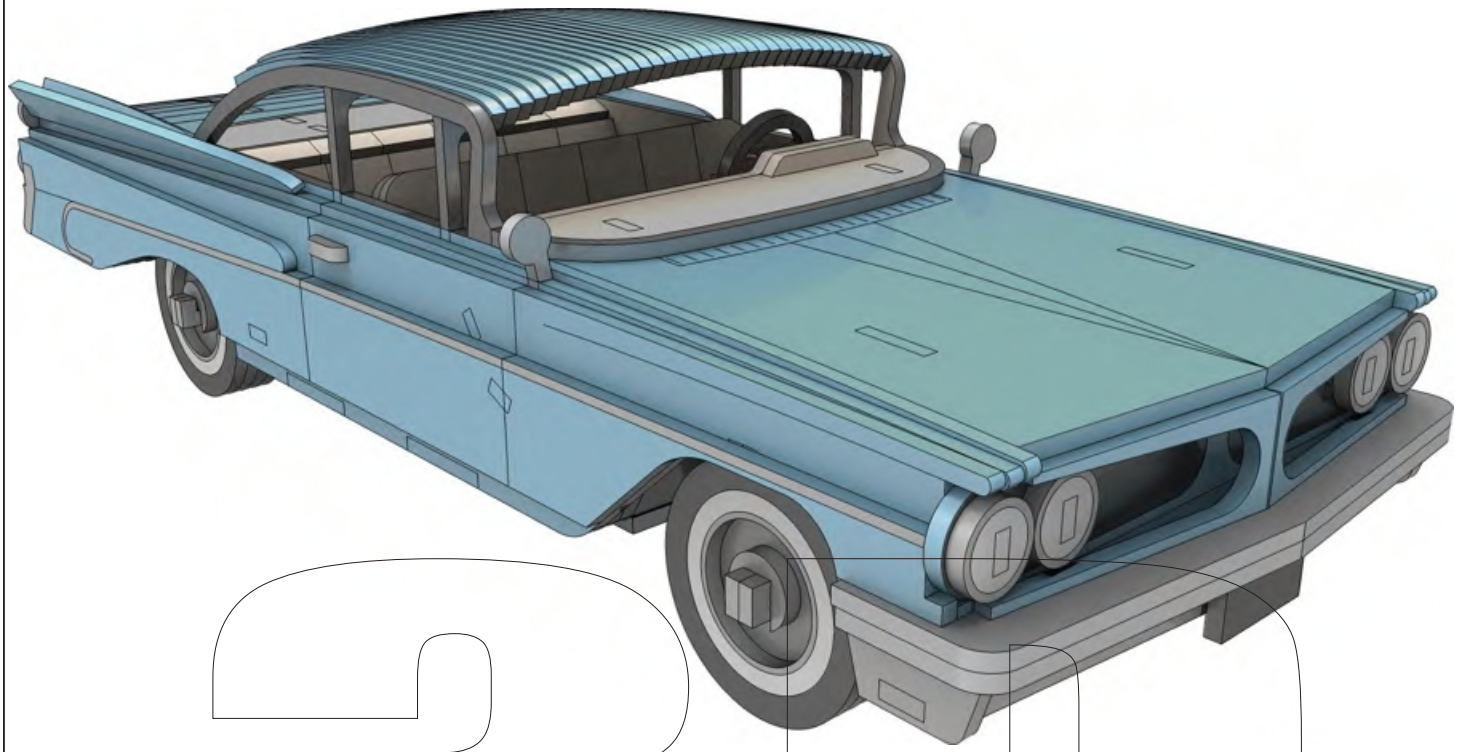

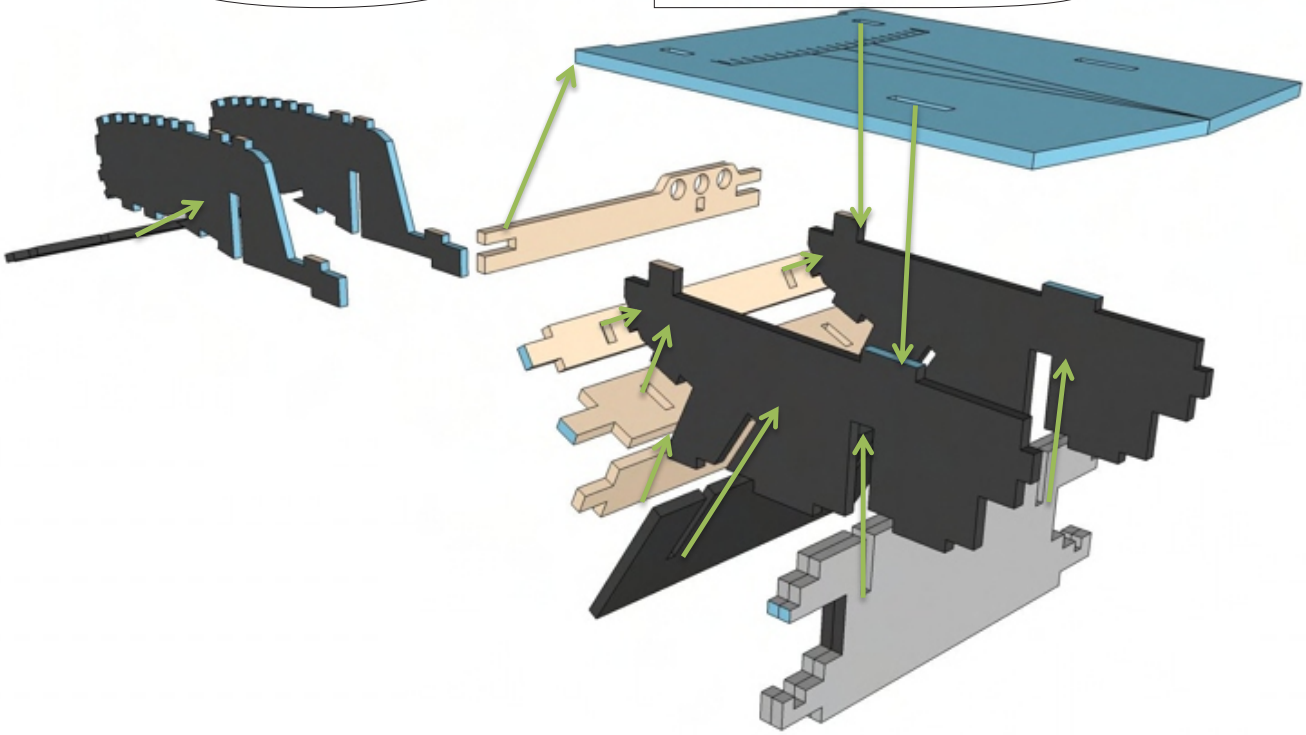

PONTIAC STRATO SEDAN ”59” 2/5

3D Quebra Cuca

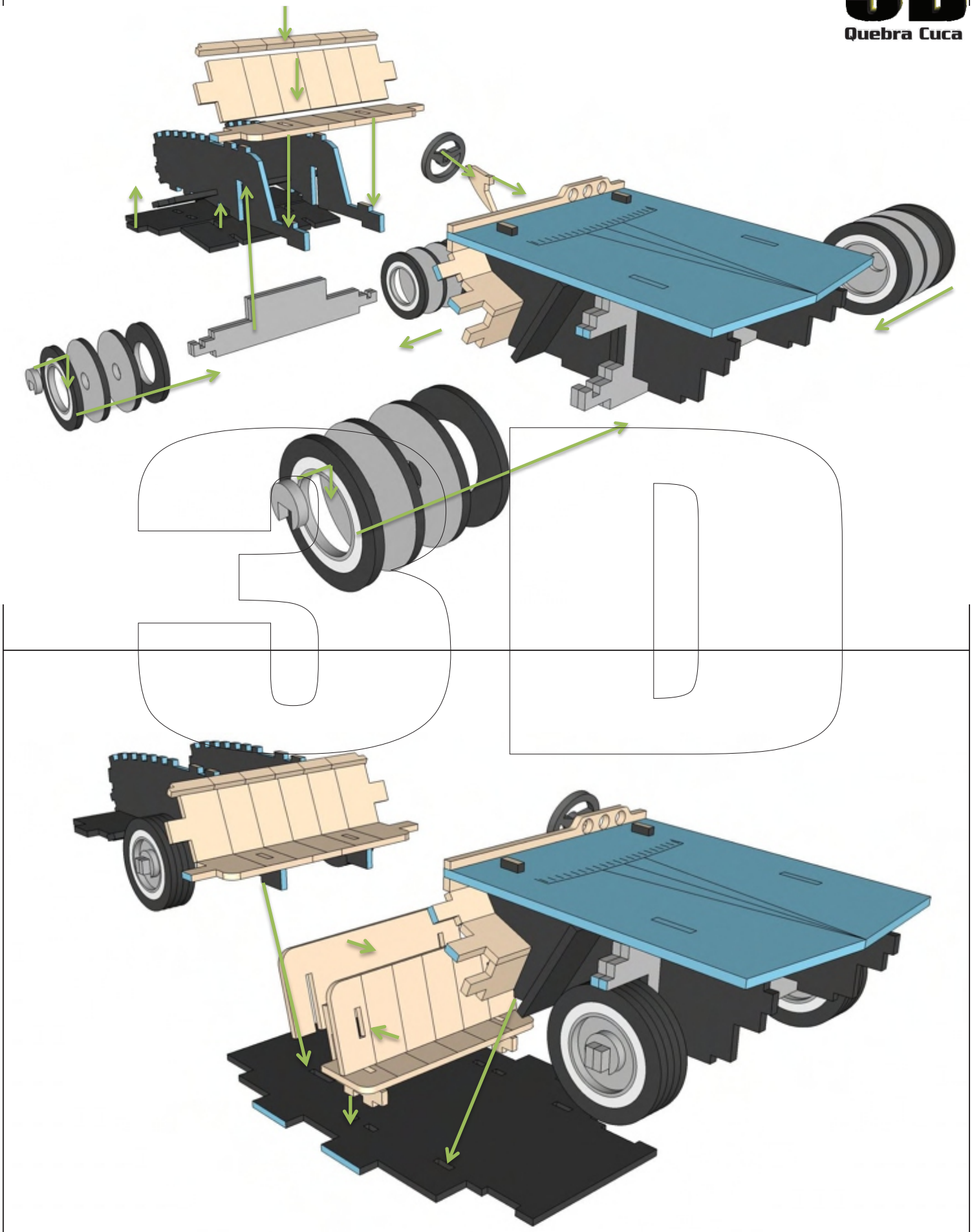

PONTIAC STRATO SEDAN ”59” 3/5

3D
Quebra Cuca

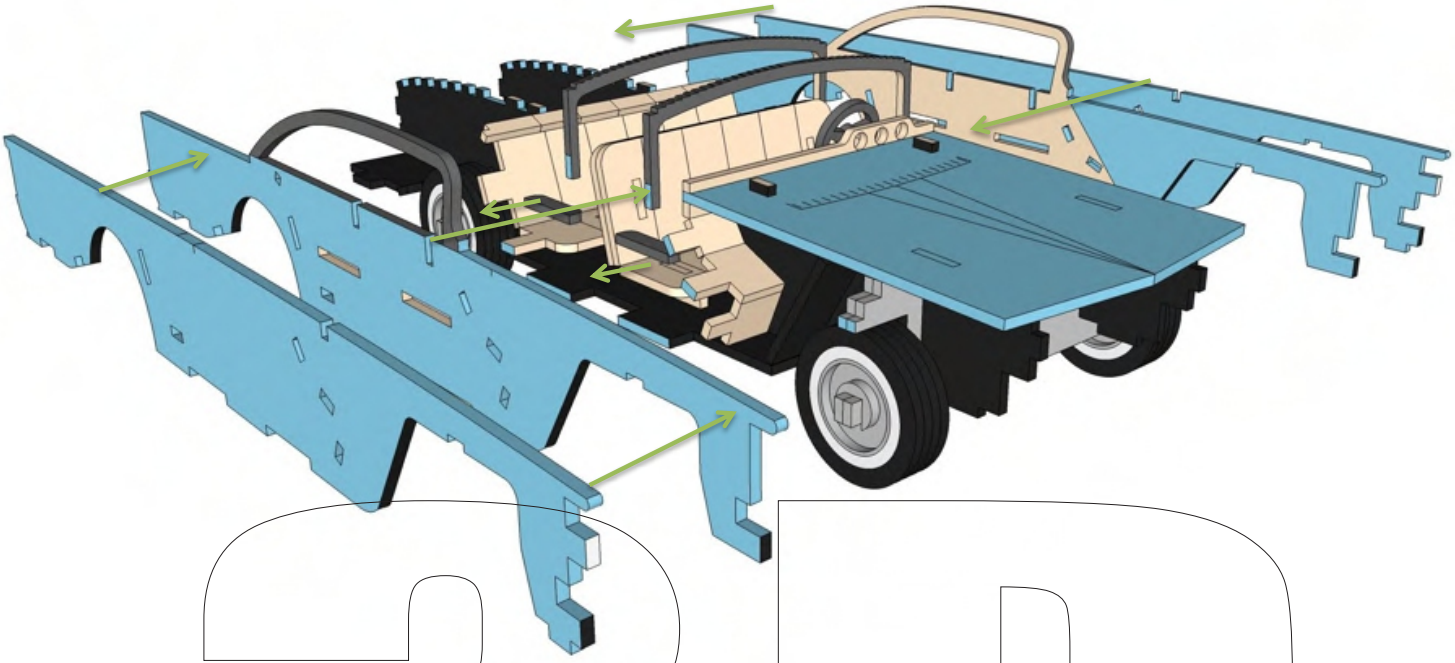

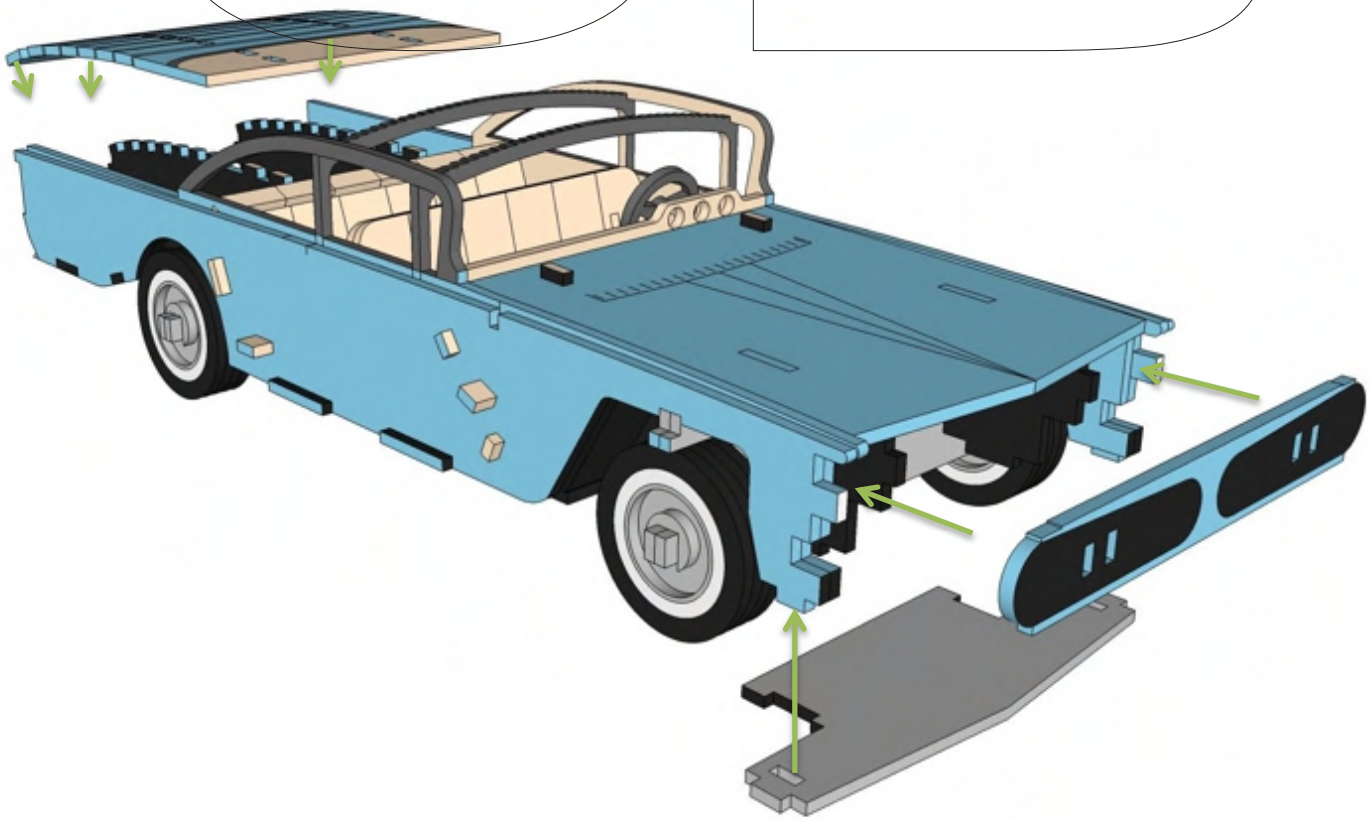

PONTIAC STRATO SEDAN ”59” 4/5

3D
Quebra Cuca

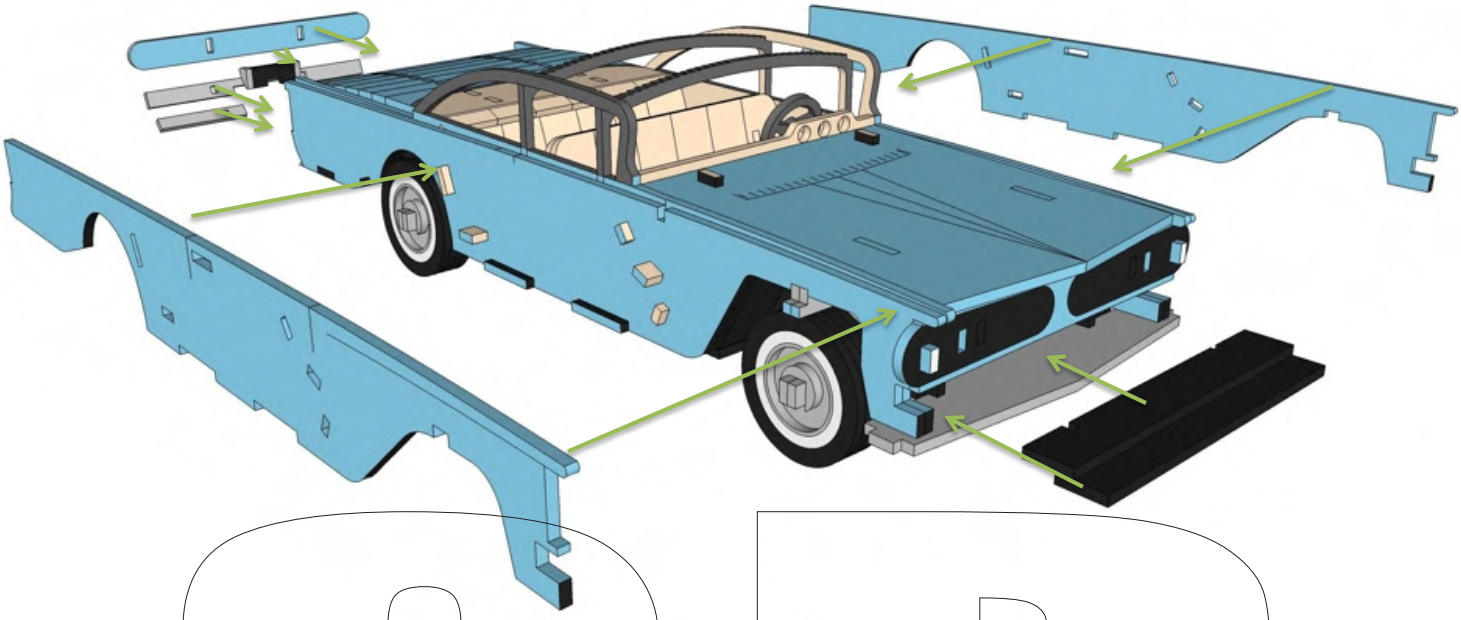

3D

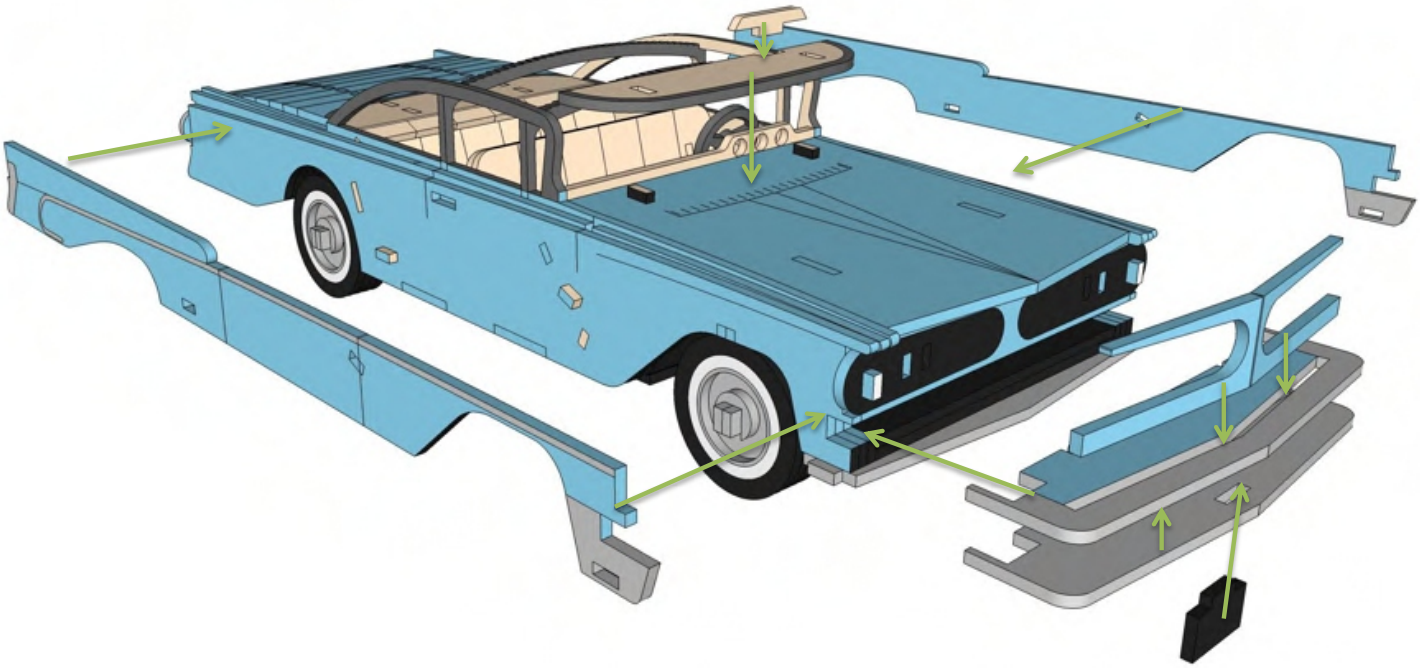

PONTIAC STRATO SEDAN ”59” 5/5
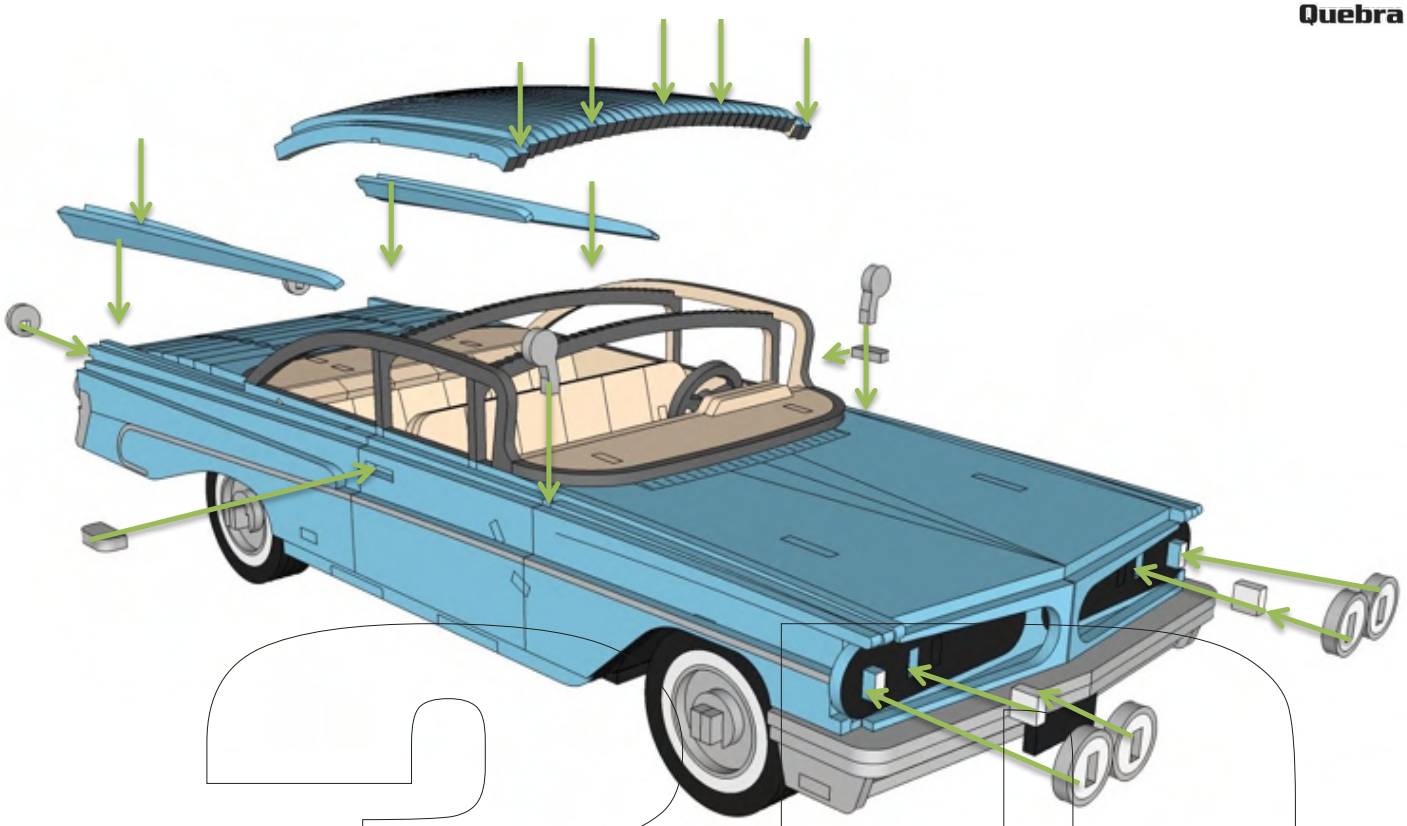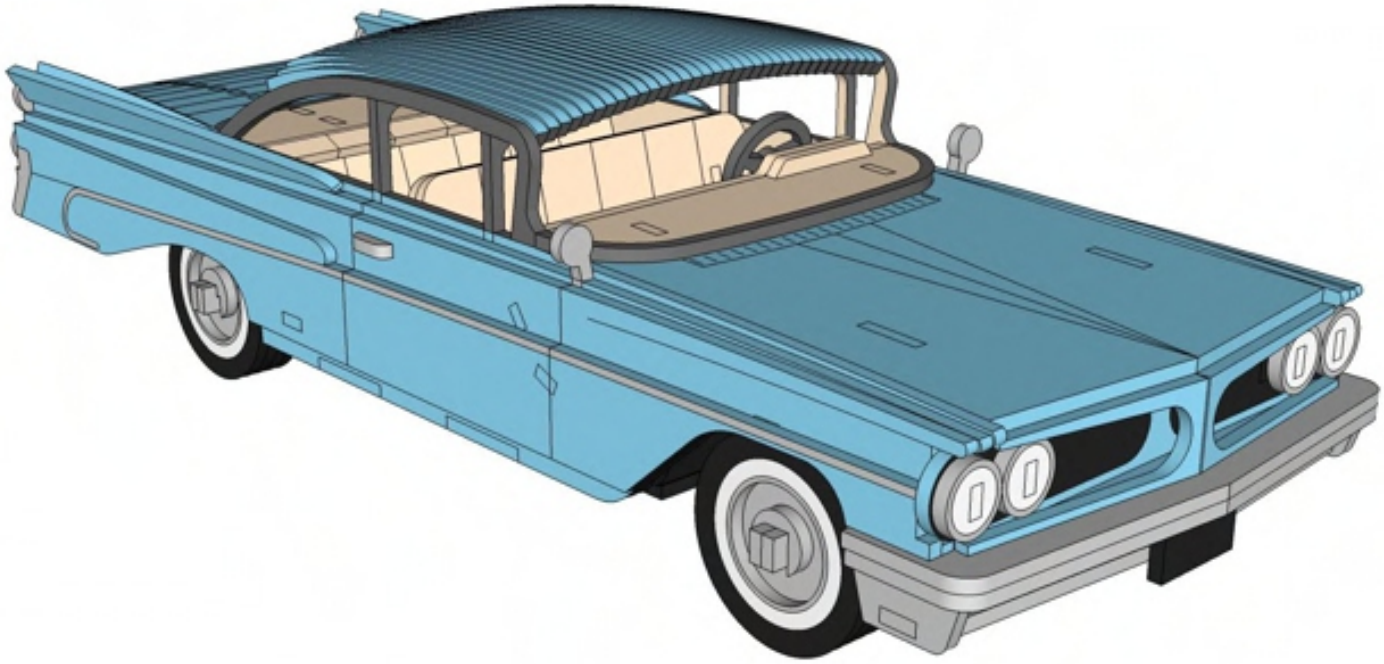
3D
Quebra Cuca